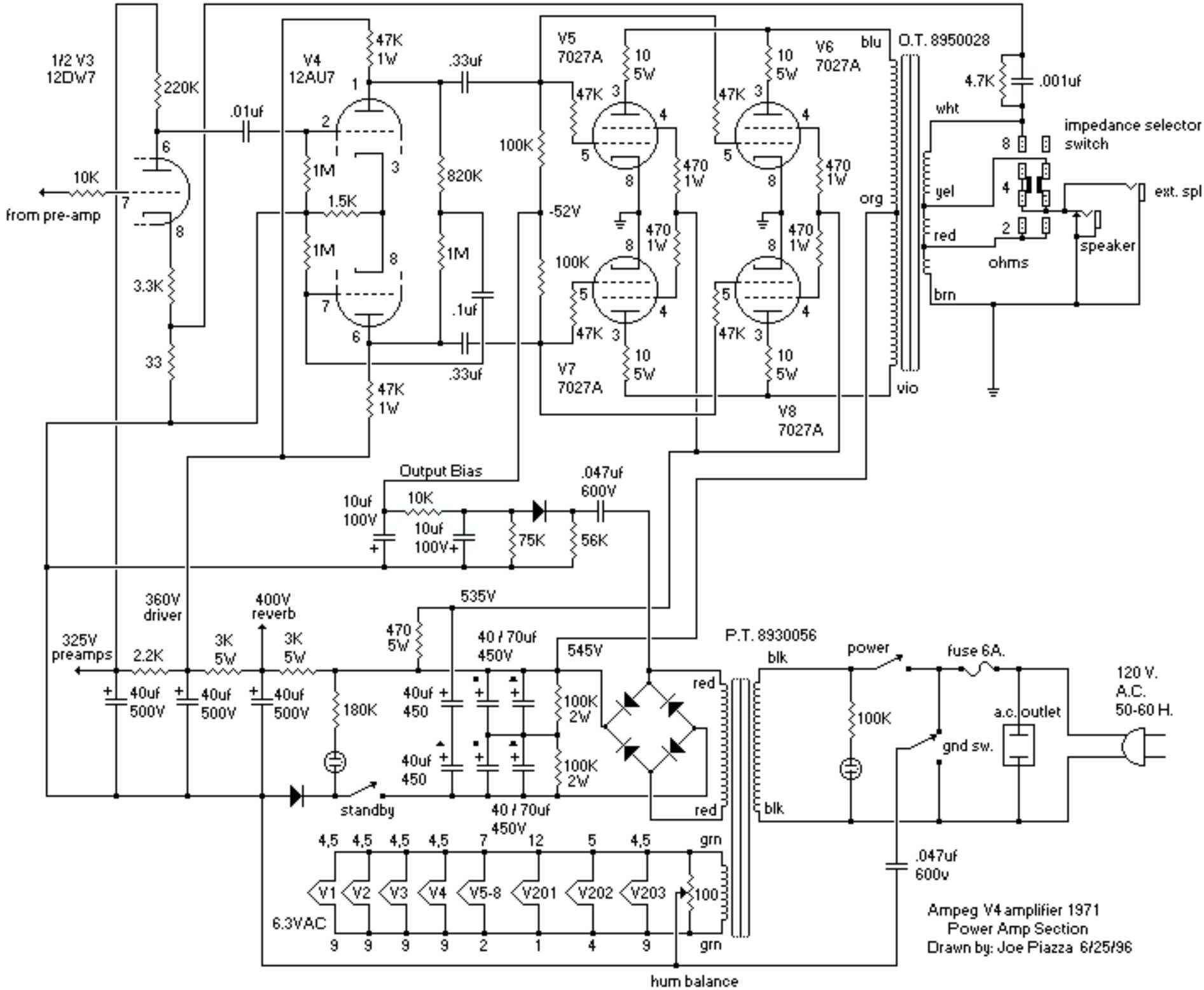
1/2 V3
12DW7
220K
.01uf
10K
from pre-amp
3.3K
33
V4
12AU7
47K
1W
1M
1.5K
1M
820K
1M
.1uf
.33uf
47K
1W
.33uf
V5
7027A
V6
7027A
V7
7027A
V8
7027A
10
5W
47K
470
1W
100K
-52V
100K
blu
O.T. 8950028
wht
yel
org
red
brn
vio
4.7K
.001uf
impedance selector
switch
ohms
ext. spl
speaker
Output Bias
10uf
100V
10K
10uf
100V
75K
.047uf
600V
56K
360V
driver
400V
reverb
535V
325V
preamps
2.2K
3K
5W
3K
5W
470
5W
40 / 70uf
450V
545V
40uf
500V
40uf
500V
40uf
500V
180K
40uf
450
40uf
450
100K
2W
100K
2W
standby
40 / 70uf
450V
red
red
P.T. 8930056
blk
blk
power
100K
fuse 6A.
a.c. outlet
gnd sw.
120 V.
A.C.
50-60 H.
.047uf
600v
4,5
4,5
4,5
4,5
7
12
5
4,5
grn
V1
V2
V3
V4
V5-8
V201
V202
V203
100
6.3VAC
9
9
9
9
2
1
4
9
grn
hum balance
Ampeg V4 amplifier 1971
Power Amp Section
Drawn by: Joe Piazza 6/25/96